CLASS 10000 HD SERIES 48 SC

EXTENDED HUB, RH ROTATION

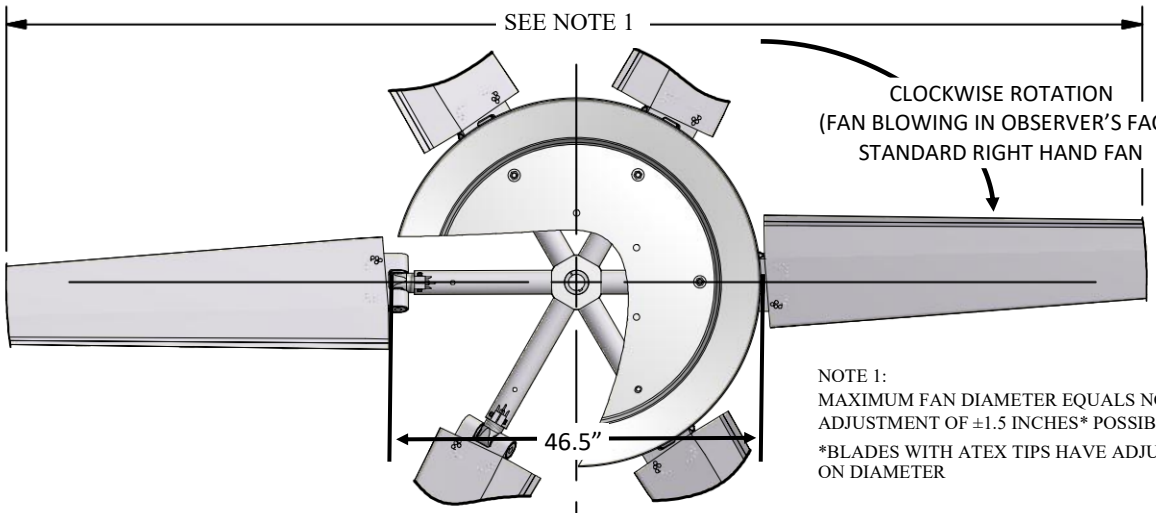

NOTE 1:
MAXIMUM FAN DIAMETER EQUALS NOMINAL FAN DIAMETER.
ADJUSTMENT OF ±1.5 INCHES* POSSIBLE AT INSTALLATION
*BLADES WITH ATEX TIPS HAVE ADJUSTMENT OF –1.0" & +2.0" ON DIAMETER

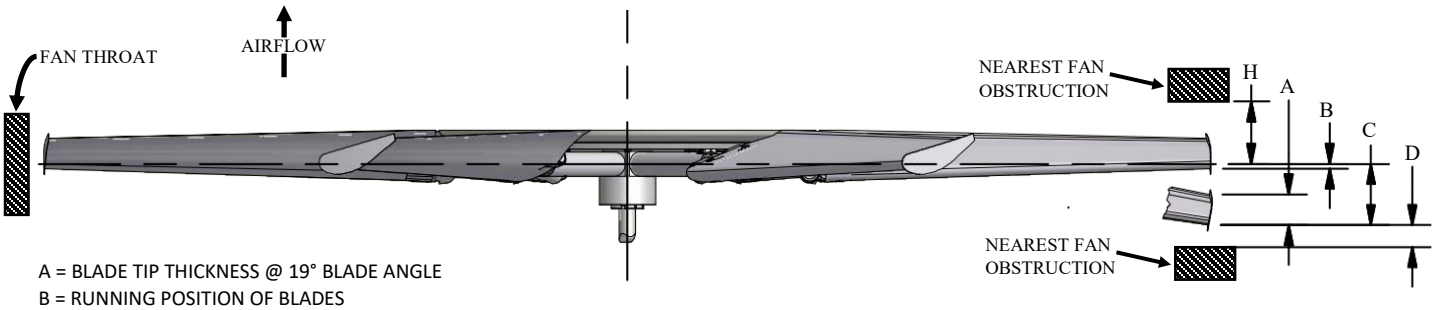

A = BLADE TIP THICKNESS @ 19° BLADE ANGLE
B = RUNNING POSITION OF BLADES
C = MAXIMUM DROOP POSITION OF BLADES
D = MINIMUM OBSTACLE CLEARANCE AT INLET
F = CENTERLINE OF FAN TO BASE OF BUSHING
G = BUSHING OVERALL HEIGHT
H = MINIMUM OBSTACLE CLEARANCE AT OUTLET
I = NOMINAL MECHANICAL HUB DIAMETER
L = MAXIMUM BUSHING TORQUE FT. LBS.
# = WITH S.A.E. STANDARD SQUARE KEYWAY
*= WITH SHALLOW KEYWAY IN BUSHING
o= MAX METRIC BORE WITH STANDARD KEYWAY

BUSHING CAN BE INSTALLED ON INLET OR OUTLET SIDE OF FAN

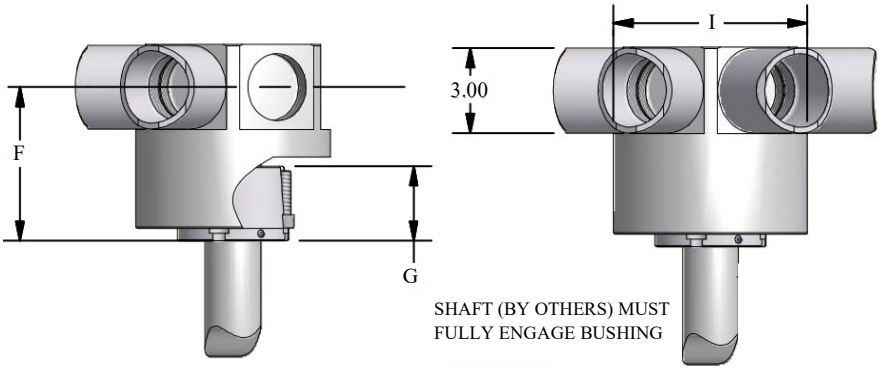

SHAFT (BY OTHERS) MUST FULLY ENGAGE BUSHING

WITH FAN OPERATING AT 12000 FT/MINUTE BLADE TIP SPEED						
		PERCENT BLADE LOADING				
		100%	75%			
DIA	A	B		C	D	H
8'	2.1"	2.3"	2.0"	2.8"	2.0"	7.0"
9'	1.9"	2.7"	2.3"	3.6"	2.0"	7.0"
10'	1.7"	3.3"	2.7"	4.4"	2.0"	7.0"
11'	1.6"	3.9"	3.1"	5.3"	2.0"	7.0"
12'	1.5"	4.5"	3.6"	6.4"	2.0"	7.0"
13'	1.3"	5.3"	4.2"	7.5"	2.0"	7.0"
14'	1.2"	6.1"	4.8"	8.7"	2.0"	7.0"
15'	1.1"	7.0"	5.5"	10.0"	2.0"	7.0"
16'	1.0"	8.0"	6.2"	11.5"	2.0"	7.0"

MAX BLADES	BUSHING TYPE	MAX # BORE	MAX * BORE	MAX o BORE	I	F	G	L
6	U	2.750"	2.938"	75	7"	5.5", 8.0", 12"	2.7"	4000
8	U	2.750"	2.938"	75	9"		2.7"	4000
8	W	3.750"	4.000"	100	9"		2.8"	7300
12	U	2.750"	2.938"	75	12"	5.5", 8.0" 12", 16" 20", 24"	2.7"	4000
12	W	3.750"	4.000"	100	12"		2.8"	7300
12	Z	5.000"	5.500"	140	12"		4.0"	18000